Diesel Engine Pumps Instruction Manual

MODELS: PDSL7305, PDSML7305, PDSL7310, PDSML7310, PDSL7315, PDSML7315

SFA Companies 10939 N. Pomona Ave. Kansas City, MO 64153
Tel: 888-332-6419 * Fax: 816-891-6599
E-mail: sales@bvahydraulics.com Website: www.bvahydraulics.com

This is the safety alert symbol. It is used to alert you to potential personal injury hazards. Obey all safety messages that follow this symbol to avoid possible injury or death.

Maximum Operating Pressure 10,000 PSI

WARNING

The engine exhaust from this product contains chemicals known to the State of California to cause cancer, birth defects or other reproductive harm.

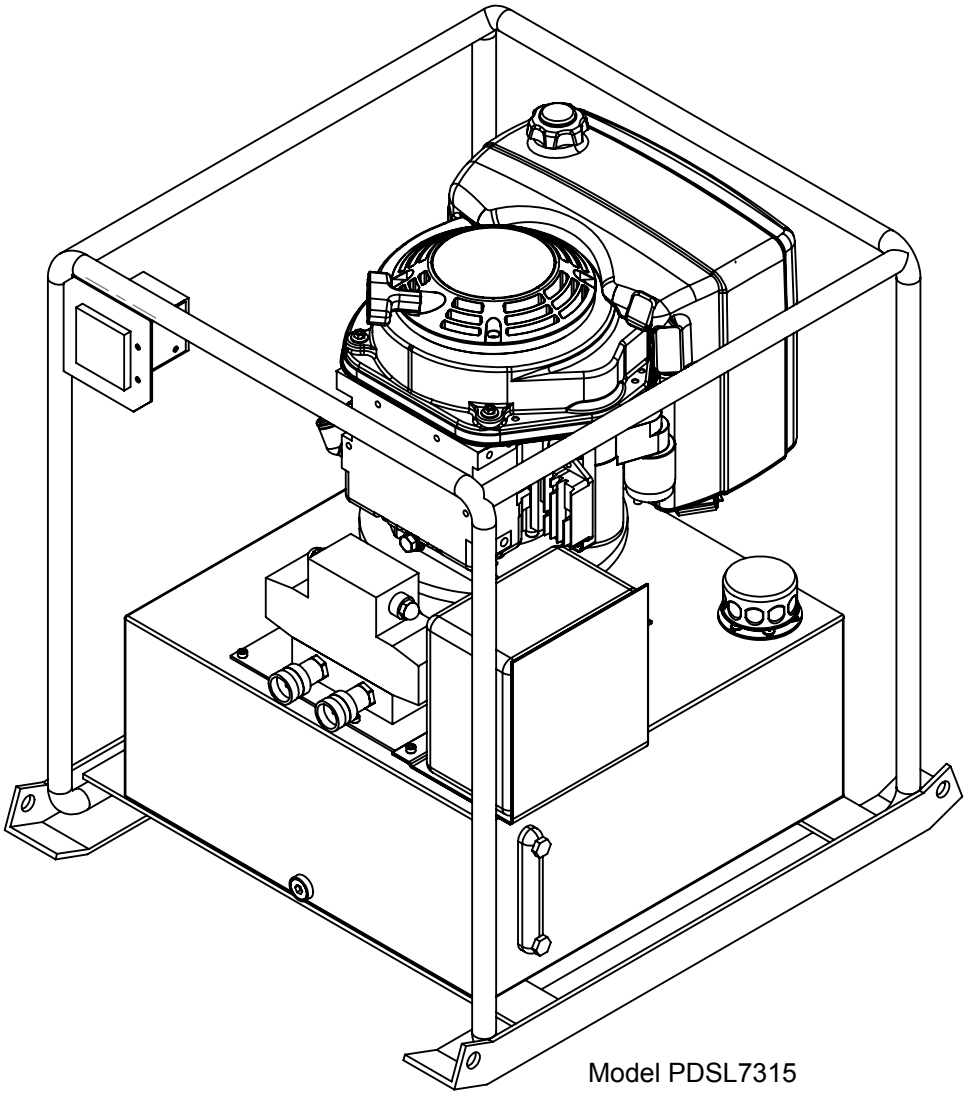

Model PDSL7315

Printed in Taiwan

SAFETY AND GENERAL INFORMATION

Save these instructions. For your safety, read and understand the information contained within. The owner and operator shall have an understanding of this product and safe operating procedures before attempting to use this product. Make certain that the operator thoroughly understands the inherent dangers associated with the use and misuse of the product. If any doubt exists as to the safe and proper use of this product as outlined in this factory authorized manual, remove from service immediately.

Inspect before each use. It is recommended that, prior to each use, an inspection be done by qualified personnel and that any missing or damaged parts, decals, warning / safety labels or signs be replaced with factory authorized replacement parts only. Any pump that appears to be damaged in any way, is worn, leaking or operates abnormally shall be removed from service immediately until such time as repairs can be made. Any pump that has been or suspected to have been subject to a shock load (a load dropped suddenly, causing the system pressure to exceed 10,000 PSI), shall be removed from service immediately until checked by qualified personnel. Owners and operators of this equipment shall be aware that the use and subsequent repair of this equipment may require special training and knowledge.

PRODUCT DESCRIPTION

BVA Hydraulics Diesel Engine Pump is engineered to meet most industrial standards for Performance and Safety. These pumps provide hydraulic power when electricity and air power are not available. These pumps supply compressed hydraulic fluid to compatible applications i.e. rams, presses, spreaders, compactors and crimping machines, anywhere that 10,000 PSI of fluid pressure is needed. Special skill, knowledge and training may be required for a specific task and the product may not be suitable for all the jobs described above. Unsuitable applications would include applications that call for a device to move, level or support persons, animals, hazardous materials, mobile homes/ dwellings in general, mirrors and/or plate glass, and/or to connect/secure hatches, components, etc. between bulkheads. The user must make the decision regarding suitability of the product for any given task and assume the responsibility of safety for himself and others in the work area.

NOTICE: *Please refer to diesel engine owner's manual for engine information*.

⚠ **WARNING**: *To reduce the risk of personal injury and/or property damage, ensure that the rated working pressure of each pressurized attachment be equal to or greater than the rated working pressure developed by the hydraulic pump.*

⚠ **CAUTION:** *Always check connections before using. Alteration of these products is strictly prohibited. Use only those adapters, attachments and accessories provided and approved by the manufacturer.*

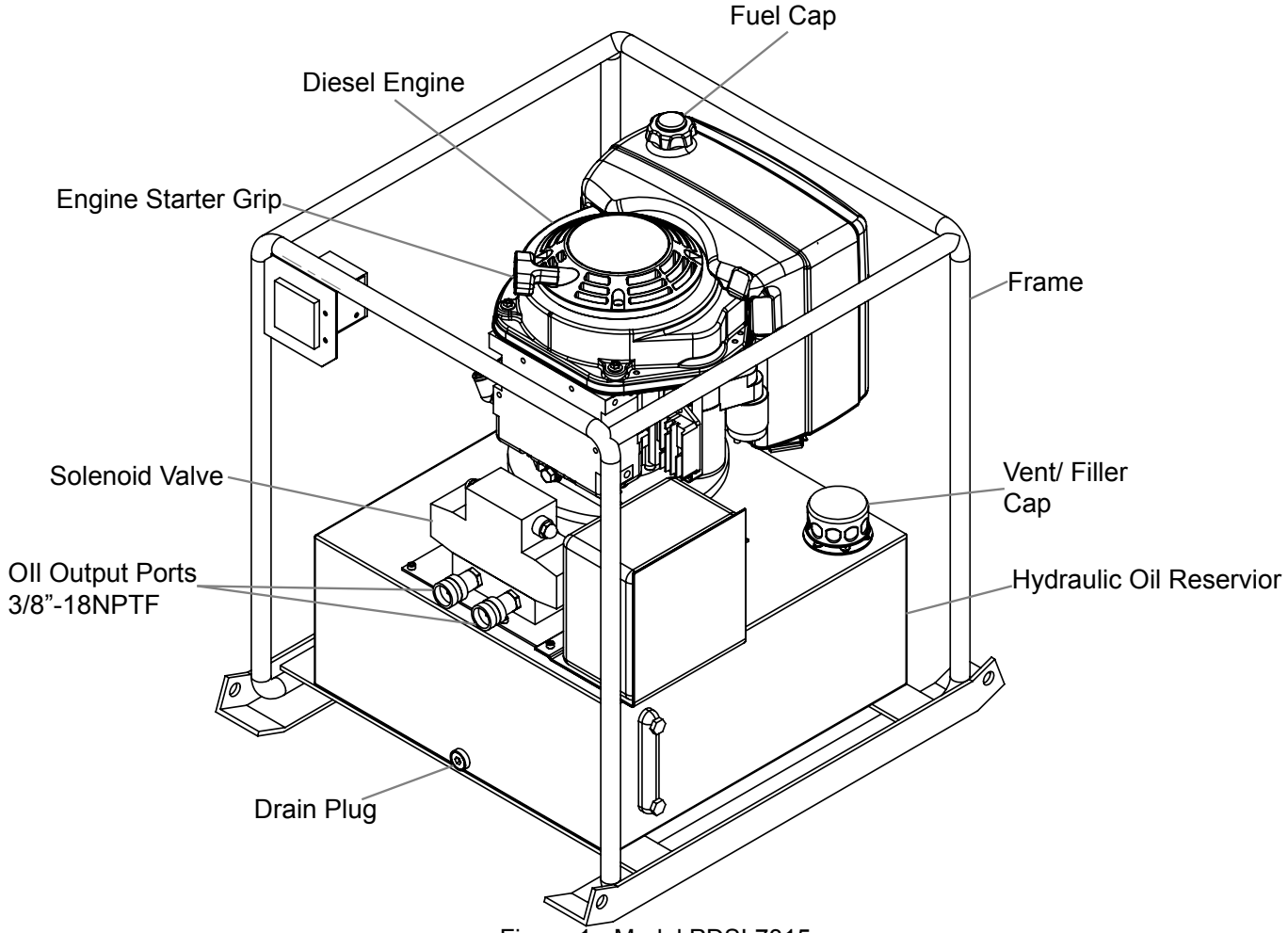

Figure 1 - Model PDSL7315

SPECIFICATIONS

Model Number	Use with Cylinder	Usable Oil Capacity (gal)	Pressure Rating (psi)		Output Flow Rate (in^3/min)		Valve Type	Valve Function	Motor Size (hp)	Output Port Threads	Weight (lb)
			1st Stage	2nd Stage	1st Stage	2nd Stage					
PDSL7305	Single Acting	5	700	10,000	600	200	Solenoid	Advance/ Hold/ Return	7.3	3/8” - 18NPT	215
PDSML7305	Double Acting										
PDSL7310	Single Acting	10									249
PDSML7310	Double Acting										
PDSL7315	Single Acting	15									283
PDSML7315	Double Acting										

BEFORE USE

1. Visually inspect all components for shipping damage. Do not use if any damaged parts are found.

NOTICE: *Diesel Pump is shipped without hydraulic oil. Add oil before operating.*

2. Familiarize yourself with the specifications and illustrations in this owners manual. Many malfunctions in new equipment are the result of improper operation and/or improper set-up assembly. Know your pump, its limitations and how it operates before attempting to use. Refer to specification chart and figure 1 on page 2 for details of oil port thread size, usable oil capacity and more. Read and follow all instructions carefully.

⚠ **WARNING:** *Maximum working pressure is 10,000 PSI. All hydraulic equipments such as cylinders, hoses, couplers and etc. used with this pump shall be rated at or above 10,000 PSI operating pressure.*

Hydraulic Connections:

1. Use only hydraulic oil specified by the manufacturer. Check and make sure the oil level in reservoir is at about 2" from top of reservoir plate, with cylinder retracted and motor off. Refer to page 5 to *Adding Hydraulic Fluid* section if needed.
2. Use of pressure gauge is strongly recommended. Attach pressure gauges between the pump and cylinder, these gauges permit the operator to monitor pressure on cylinder.
3. Make sure couplers, hoses, valve and gauges are tighten securely to prevent accidental removal of components while in use. Hoses shall not be kinked or twisted.

NOTICE: *Always secure threaded port connections with non-hardening pipe thread compound. Take care not to introduce compound into port orifices.*

4. Do not exceed the rated capacity of the equipment connected to the pump. Use larger capacity of cylinders if necessary.

WARNING: *There are hazards associated with the use of this equipment which can only be avoided by reading, understanding and following all the printed materials provided by the manufacturer of the gasoline engine which drives this hydraulic pump.*

WARNING

- Read, understand, and follow all instructions provided with and on this device before use.
- All WARNING statements must be carefully observed to help prevent personal injury.
- No alteration shall be made to this device.
- Always wear protective gear when operating hydraulic equipment. Tie up long hair, wear eye and ear protection, and nonslip foot wear.
- Keep hydraulic equipment away from flames and heat. Hydraulic fluid can ignite and burn. Do not operate if leaks are detected.
- Crush Hazard. Keep hands and feet away from loading area. Avoid pinch points or crush points that can be created by the load, cylinder, or system components.
- To avoid crushing and related injuries: NEVER work on, under or around a lifted load before it is supported by appropriate mechanical means. Never rely on hydraulic pressure alone to support load.

HYDRAULIC PUMPS

- The user must be a qualified operator familiar with the correct operation, maintenance, and use of pumps. Lack of knowledge in any of these areas can lead to personal injury.
- Do not exceed rated capacity of the pump or any equipment in the system.
- Never attempt to lift a load weighing more than the capacity of the output device (cylinder, spreader etc.)
- Do not subject pump and its components to shock loads.
- Burst hazard exists if hose or connection pressure exceeds rated pressure.
- Inspect pump, cylinder, hoses and connections before each use to prevent unsafe conditions from developing. Do not use if they are damaged, altered or in poor condition. Do not operate the system with bent or damaged coupler or damaged threads.
- Never hold or stand directly in line with any hydraulic connections while pressurizing.
- ALWAYS use gauge or other load measuring instrument to verify load.
- Never attempt to disconnect hydraulic connections under pressure. Release all line pressure before disconnecting hoses.
- Do not operate this device in an extreme temperature, explosive atmosphere or in the presence of conductive liquids.
- Always inspect hoses and connections for damage prior to use.
- Ensure the device is placed on a hard, level surface.
- Ensure that application is stable to work on and around.
- Use only approved accessories and approved hydraulic fluid.
- Never attach ANY component not authorized by manufacturer.
- Do not connect to application which can return more oil to the reservoir than the pump reservoir can hold.
- Do not connect pump to hydraulic system powered by another pump.
- This device is not suitable for use as support device! As the system load is lifted, use blocking and cribbing to guard against a falling load.
- All personnel must be clear before lowering load or depressurizing the system.
- Never try to disassemble a hydraulic pump, refer repairs to qualified, authorized personnel.

HYDRAULIC HOSES & FLUID TRANSMISSION LINES

- Avoid short runs of straight line tubing. Straight line runs do not provide for expansion and contraction due to pressure and/or temperature changes.
- Reduce stress in tube lines. Long tubing runs should be supported by brackets or clips. Before operating the pump, tighten all hose connections with proper tools. Do not overtighten. Connections should only be tightened securely and leak-free. Overtightening can cause premature thread failure or high pressure fittings to burst.
- Should a hydraulic hose ever rupture, burst or need to be disconnected, immediately shut off the pump and release all pressure. Never attempt to grasp a leaking pressurized hose with your hands. The force of escaping hydraulic fluid can inflict injury.
- Do not subject the hose to potential hazard such as fire, sharp objects, extreme heat or cold, or heavy impact.
- Do not allow the hose to kink, twist, curl, crush, cut or bend so tightly that the fluid flow within the hose is blocked or reduced. Periodically inspect the hose for wear.
- Do not pull, position or move setup by the hose.
- Hose material and coupler seals must be compatible with hydraulic fluid used. Hoses also must not come in contact with corrosive materials such as battery acid, creosote-impregnated objects and wet paint. Never paint a coupler or hose.
- FAILURE TO HEED THESE WARNINGS MAY RESULT IN PERSONAL INJURY AS WELL AS PROPERTY DAMAGE.

OPERATION

WARNING: *ALWAYS monitor pressure, load or position using suitable equipment. Pressure may be monitored by means of an optional manifold and gauge (contact BVA Hydraulics). Load may be monitored by means of a load cell and digital indicator. Correct application position can only be determined by the operator of the equipment.*

1. Check all system fittings and connections to be sure they are tight and leak free.
2. Check the engine oil level. Please refer to engine owner's manual.
3. Before starting the pump, always ensure nothing is pressing the buttons on the hand remote control to prevent accidental lifting or moving of load.
4. To start engine, refer to engine owner's manual.
5. Let the pump idle for a few minutes before put into operation.
6. Use the hand remote control to control the direction of fluid flow. This diesel engine pump is equipped with a solenoid valve, refer to table below for flow paths.

Use with Cylinder	Flow Paths **Button Option1 (Advance):** Pressure oil flows to port A.	**Button Option 2 (Hold):** Neutral, port A is closed. Hold Position	**Button Option 3 (Retract):** Port A returns flow to tank.
Single Acting	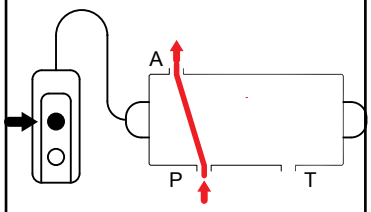	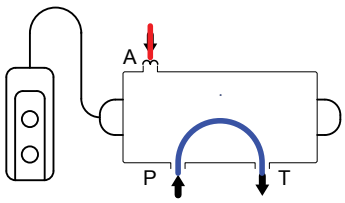	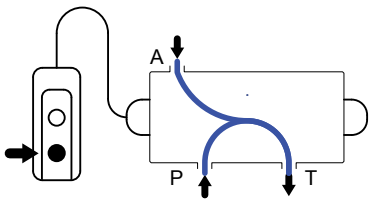
Double Acting	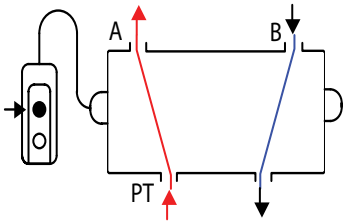	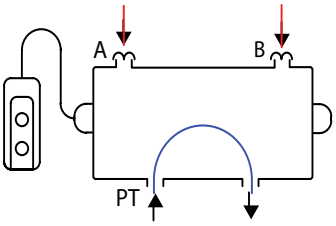	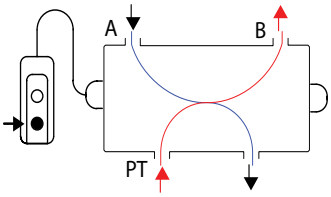

NOTICE: *Do not continue to operate pump after cylinder plunger is fully extended or retracted.*

7. To stop the engine, refer to engine owner's manual.
8. Depressurize all connections before disconnect.

NOTICE: *Solenoid valve on this pump is for use with double-acting cylinders or single. If your application requires a manual valve this is available, and can be changed by an authorized BVA Service Center. If you have any doubt, please contact BVA Technical Service 888-332-6419.*

MAINTENANCE

1. For diesel engine, please refer to engine owner's manual.
2. Inspect hoses and connections daily. Replace damaged components immediately with BVA Hydraulics replacement parts only.
3. Tighten connections as needed. Use non-hardening pipe thread compound when servicing connections.
4. Check hydraulic oil level every 40 hours of operation. Add hydraulic oil if necessary.
5. Completely change the hydraulic oil every 300 hours of operation. Change the oil more frequently when pump is used in an extremely dusty environment or when the oil has been overheated. Use only good quality hydraulic oil. We recommend BVA Hydraulic oil or preium hydraulic fluid.

Adding Hydraulic Fluid

1. Make sure engine is OFF.
2. Depressurize and disconnect from application.
3. Remove oil cap located on top plate of reservoir.
4. Use a funnel to fill reservoir to about 2" from top of reservoir plate.
5. Wipe up any spilled fluid and reinstall the oil cap.

Diesel Engine Pump Service Parts

MODEL: PDSL7305, PDSML7305, PDSL7310, PDSML7310, PDSL7315, PDSML7315

SFA Companies 10939 N. Pomona Ave. Kansas City, MO 64153
Tel: 888-332-6419 * Fax: 816-891-6599
E-mail: sales@bvahydraulics.com Website: www.bvahydraulics.com

Note: Not all components of the pump are replacement items, but are illustrated as a convenient reference of location and position in the assembly sequence.

Parts Illustration

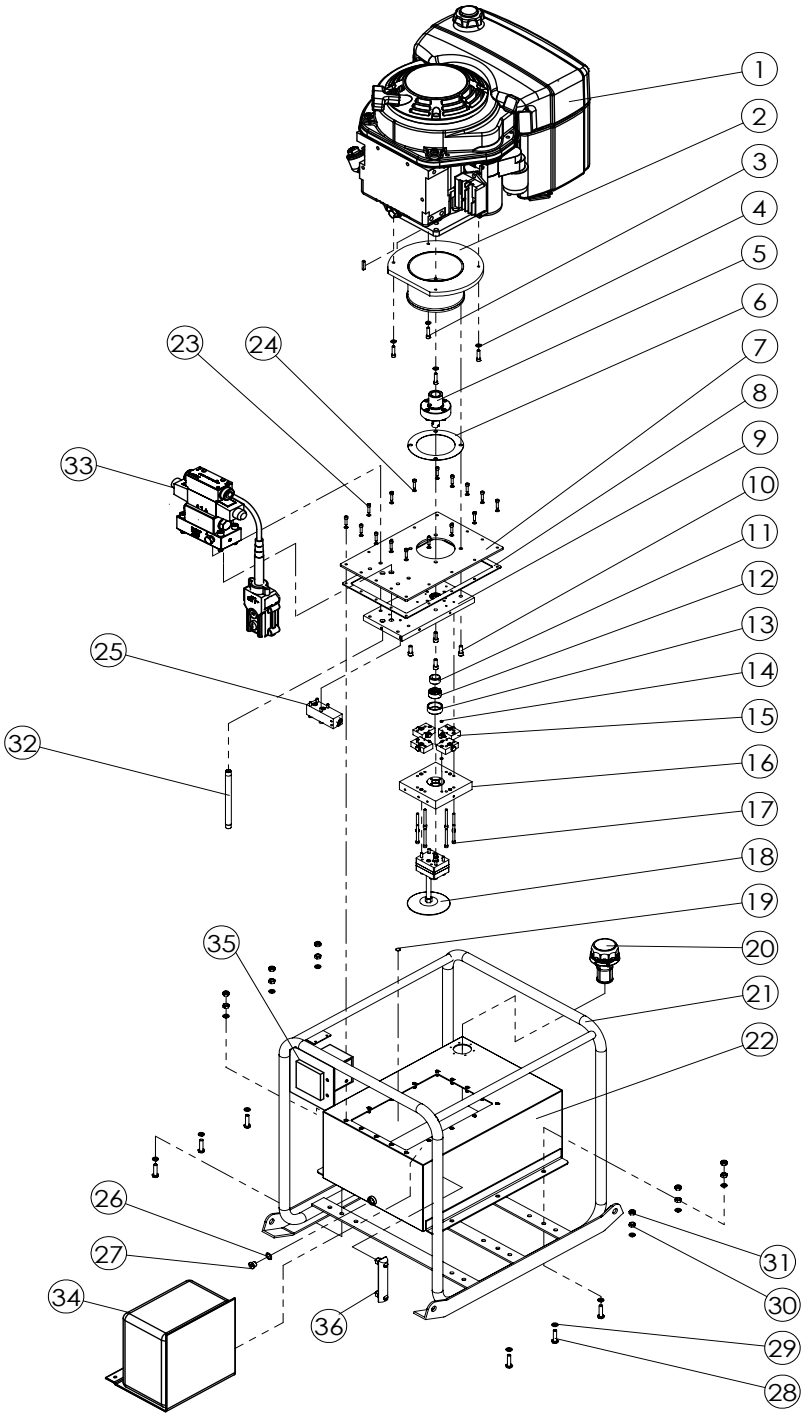

Diesel Engine Pump Service Parts

MODEL: PDSL7305, PDSML7305, PDSL7310, PDSML7310, PDSL7315, PDSML7315

SFA Companies 10939 N. Pomona Ave. Kansas City, MO 64153
Tel: 888-332-6419 * Fax: 816-891-6599
E-mail: sales@bvahydraulics.com Website: www.bvahydraulics.com

NOTE: Not all components of the pump are replacement items, but are illustrated as a convenient reference of location and position in the assembly sequence.

Parts List

Item No.	Part No. for Model						Description	Qty
	PDSL7305	PDSL7310	PDSL7315	PDSML7305	PDSML7310	PDSML7315		
1	V60-4-9000-107						Motor, 7.3 hp	1
2	E55-3-3007-109						Adapter Flange	1
3	649-1-0079-132						Socket Head Cap Screw	4
4	605-3-0080-102						Washer	4
5d*	V60-4-3011-102						Shaft Adaptor Unit	1
6	E05-6-9002-107						Gasket-Motor	1
7	E10-6-9003-102						Reservoir Cover	1
8	E05-6-9004-101						Reservoir Gasket	1
9	E55-4-3000-101						Upper Plate Assy.	1
10	649-1-0095-204						Socket Head Cap Screw	4
11	E30-6-9006-104						Eccentric 7/8 Shaft	1
12	622-6-0318-203						Needle Bearing	1
13	E05-6-9007-107						Eccentric Bearing	1
14	511-7-0064-109						O-ring	2
15c*	E15-4-4000-104						Piston Block Assy.	4
16	E30-4-5000-100						Lower Plate Assy.	1
17	649-1-0063-403						Socket Head Cap Screw	8
18g*	E05-4-6007-100						Gear Pump Assy.	1
19	H23-6-1000-102						Magnet	1
20	E10-4-2000-109						Vent Cap/ Filler Cap	1
21	V60-4-9006-109						Frame Assy.	1
22	E55-4-9005-101	V60-4-9006-109		E55-4-9005-101			Reservoir	1
23b*	649-1-0060-407						Socket Head Cap Screw	16
24b*	601-3-0064-106						Washer	16
25h*	E05-4-8000-106						Manifold, Safety Valve	1
26a*	532-3-0160-104						Washer	1
27a*	E05-6-8008-104						Drain Plug	1
28i*	653-1-0100-078						Hex Head Bolt	6
29i*	605-3-0100-203						Washer	12
30i*	651-2-0100-007						Nut	6
31i*	661-2-0100-014						Nut	6
32	E11-6-3009-101						Drain Line	1
33	PS33L			PS43L			Solenoid Assy.	1
34	BATT-B-01						Battery Box	1
35							Key Starter	1
36	611-8-0127-102						Sight Gauge	1

NOTE: If Part No. contains a letter then repair kit is on page 8

Repair Kit Service Parts

MODEL: PDSL7305, PDSML7305, PDSL7310, PDSML7310, PDSL7315, PDSML7315

SFA Companies 10939 N. Pomona Ave. Kansas City, MO 64153
Tel: 888-332-6419 * Fax: 816-891-6599
E-mail: sales@bvahydraulics.com Website: www.bvahydraulics.com

Repair Kit List Service Parts

Item	Repair Kit No. for Model						Description	Qty
	PDSL7305	PDSL7310	PDSL7315	PDSML7305	PDSML7310	PDSML7315		
(a)*	E05-3-9901-103						Drain Plug Repair Kit	-
(b)*	E60-3-9902-108						Reservoir Bolt Repair Kit	-
(c)	E15-3-9940-101						Piston Bk Assy Repair Kit	-
(d)	E55-3-9991-100						Shaft Adaptor Repair Kit	-
(e)	D09-3-9951-107			D09-3-9951-107			Valve Assy. Repair Kit	-
(f)	D08-3-9950-108			E08-3-9950-108			Valve Assy. Bolt Repair Kit	-
(g)*	E15-3-9960-107						Gear Pump Repair Kit	-
(h)*	E05-3-9980-105						Manifold Assy. Repair Kit	-
(i)	E60-3-9990-101						Fram Repair Kit	-
--	F01						BVA Hydraulic Oil, 1 gal	-
--	F05						BVA Hydraulic Oil, 5 gal	-

* - Components are not shown in assemblies

Piston Block Assembly Repair Kit Service Parts
E15-3-9940-101

Item	Description	Qty
1	Spring	2
2	O-Ring	2
3	Ball	2
*	O-Ring	2

* - This component is not shown in the Piston Block Assembly

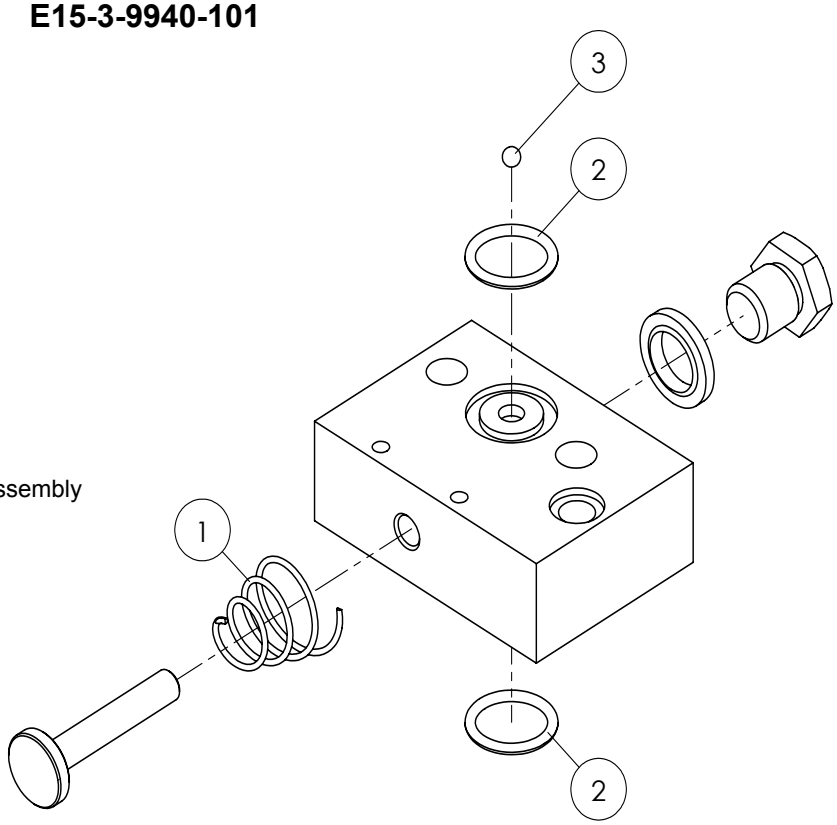

Repair Kit Service Parts

MODEL: PDSL7305, PDSML7305, PDSL7310, PDSML7310, PDSL7315, PDSML7315

SFA Companies 10939 N. Pomona Ave. Kansas City, MO 64153
Tel: 888-332-6419 * Fax: 816-891-6599
E-mail: sales@bvahydraulics.com Website: www.bvahydraulics.com

Gear Pump Repar Kit Service Parts
E15-9-9960-107

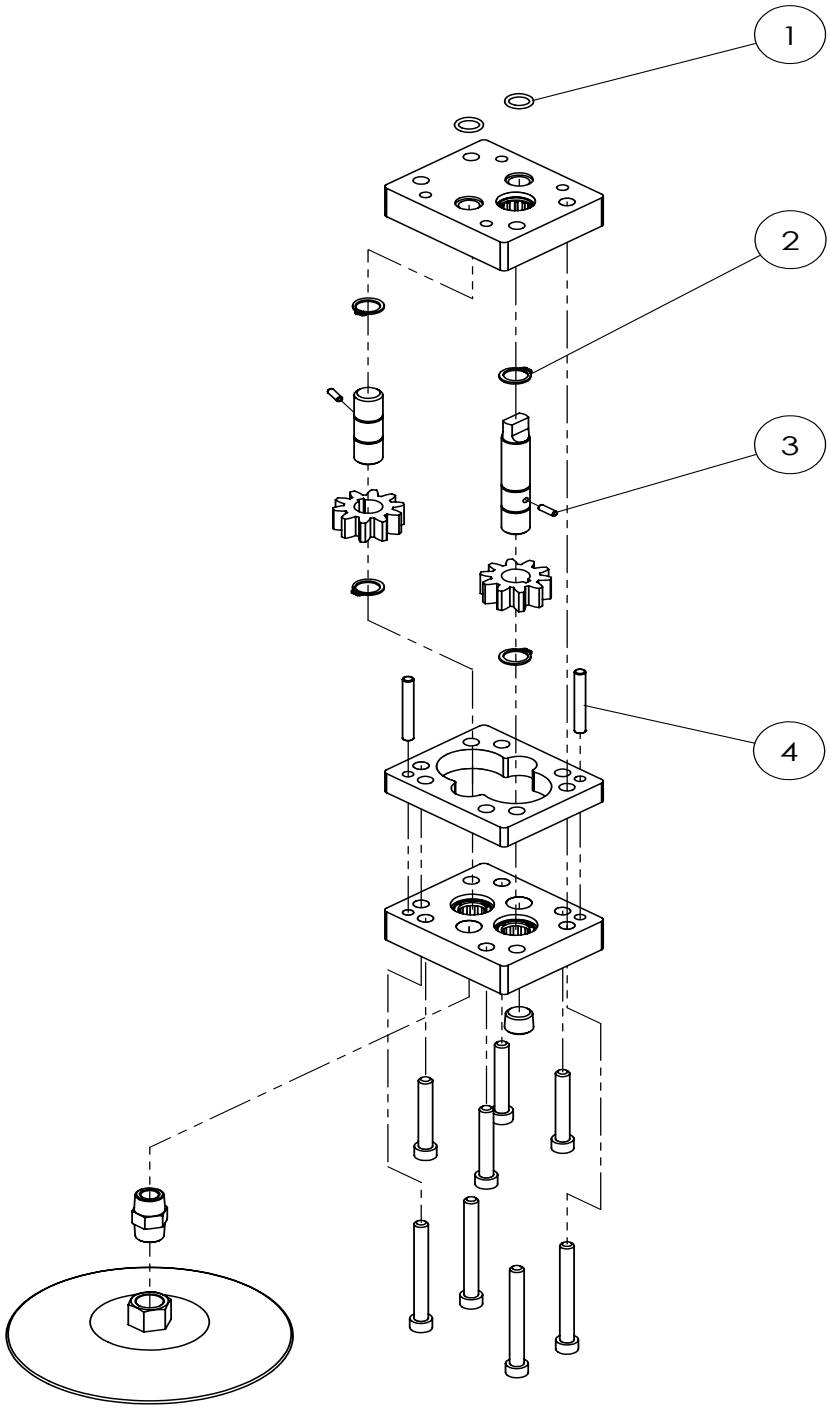

Item	Descritpion	Qty
1	O-Ring	2
2	Retaining Ring-External	4
3	Pin Dowel	2
4	Pin Dowel	2

LIMITED LIFETIME WARRANTY

BVA Hydraulics®, represented in the United States by SFA Companies ["SFA"] warrants this product to be free from defects in material and workmanship for the life of the product as long as the original purchaser owns the product. The warranty is non-transferable and is subject to the terms, exclusions, and limitations described below:

- Damaged components, including but not limited to bent rams, dented or crushed cylinder walls, broken welds or couplers as well as worn out seals, o-rings and springs are the result of misuse and not covered by warranty and BVA Hydraulics will not provide any warranty credit for such damaged components.
- This warranty does not cover ordinary wear and tear, overloading, alterations (including repairs or attempted repairs not performed by BVA Hydraulics or one of its authorized personnel), improper fluid use, or use of the product in any manner for which the product was not intended or the use of which is not in accordance with the instructions or warnings provided with the product.
- In the unlikely event that a BVA Hydraulics product fails due to material defect in workmanship, you may contact SFA for disposition. In such cases, the customer's sole and exclusive remedy for any breach or alleged breach of warranty is limited to the repair or replacement of the defective product.
- Under no circumstances is BVA Hydraulics liable for any consequential or incidental damage or loss whatsoever.
- THIS WARRANTY IS LIMITED TO NEW PRODUCTS SOLD THROUGH AUTHORIZED DISTRIBUTORS AND OTHER CHANNELS DESIGNATED BY BVA HYDRAULICS. NO AGENT, EMPLOYEE OR OTHER REPRESENTATIVE OF BVA HYDRAULICS IS AUTHORIZED TO MODIFY THIS WARRANTY.
- THE FOREGOING IS EXCLUSIVE AND IS IN LIEU OF ALL OTHER EXPRESS AND IMPLIED WARRANTIES, INCLUDING BUT NOT LIMITED TO THE IMPLIED WARRANTIES OF MERCHANTABILITY AND FOR A FITNESS FOR A PARTICULAR PURPOSE.
- Components not manufactured by BVA Hydraulics including certain motor systems, gasoline engines, and others are not covered by this warranty and instead are covered by the manufacturer's separate manufacturer's warranty provided in the package.
- BVA Hydraulics' liability in all cases is limited to, and will not exceed the purchase price paid for the product.

SFA Companies
10939 N. Pomona Ave. Kansas City, MO 64153
Tel: 888-332-6419
E-mail: sales@bvahydraulics.com