Blackhawk Automotive™

Blackhawk Automotive is a Licensed Trade Mark — Made by SFA Companies, Kansas City, MO

Hydraulic Transmission Jacks

Operating Instructions & Parts Manual

Model	Capacity
BH7011	1/2 Ton
BH7210	1 Ton

This is the safety alert symbol. It is used to alert you to potential personal injury hazards. Obey all safety messages that follow this symbol to avoid possible injury or death.

ADVERTENCIA

- Leer, comprender, y seguir las instrucciónes antes de utilizar el aparato.
- El manual de instrucciónes y la información de seguridad deben estar comunicado en lengua del operador antes del uso.
- No seguir estas indicaciónes puede causar daños personales o materiales.

WARNING

To avoid **crushing and related injuries**:

NEVER work on, under or around a load supported only by a hydraulic jack. **Immediately** transfer the load to an appropriate work station.

⚠ **WARNING:** Cancer and Reproductive Harm.
⚠ **AVERTISSEMENT:** Cancer et dommages au système reproducteur.
⚠ **ADVERTENCIA:** Cáncer y daño reproductivo.
www.P65Warnings.ca.gov

SFA Companies
10939 N. Pomona Ave. Kansas City, MO 64153
sales@blackhawk-automotive.com

Read this manual and follow all the Safety Rules and Operating Instructions before using this product.

Made in PRC
BH7011-M0_082018

SAFETY and GENERAL INFORMATION

Save these instructions. For your safety, read, understand, and follow the information provided with and on this jack before using. The owner and operator of this equipment shall have an understanding of this jack and safe operating procedures before attempting to use. The owner and operator shall be aware that use and repair of this product may require special skills and knowledge. Instructions and safety information shall be conveyed in the operator's native language before use of this jack is authorized. If any doubt exists as to the safe and proper use of this jack, remove from service immediately.

Inspect before each use. Do not use if broken, bent, cracked or damaged parts are noted. Any jack that appears damaged in any way, or operates abnormally shall be removed from service immediately. If the jack has been or suspected to have been subjected to a shock load (a load dropped suddenly, unexpectedly upon it), immediately discontinue use until jack has been checked by a factory authorized service center (contact distributor or manufacturer for list of authorized service centers). It is recommended that an annual inspection be done by qualified personnel. Labels and Operator's Manuals are available from manufacturer.

PRODUCT DESCRIPTION

Blackhawk Automotive Hydraulic Transmission Jack is designed to be used as an aid in the removal and installation of automotive and light truck transmissions, transfer cases and transaxles. This jack is for use under portable lift equipment, where vehicle must be supported by a pair of appropriately rated jack stands.

***NEVER** use for any purpose other than those uses outlined above!*

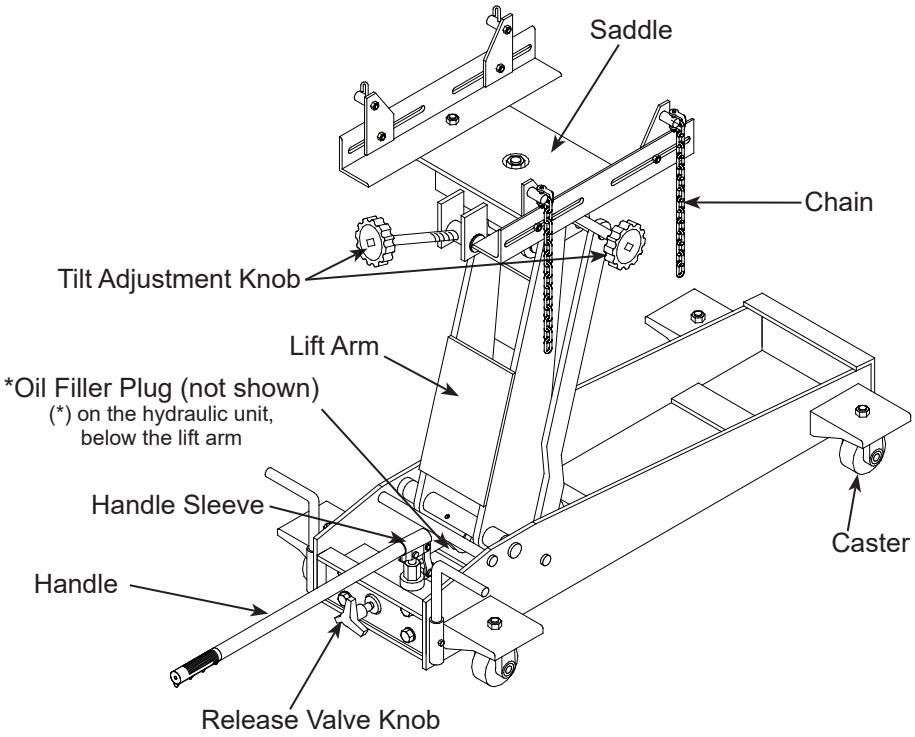

Figure 1- Typical Transmission Jack Components BH7210 shown)

PREPARATION

Assembly

The angles and chains are pre-assembled on the angle bar. Install the angle bar assembly onto the saddle plate.

<u>model BH7011 (see Fig 2):</u>

Tools required: 16mm wrench.

1. Remove the M10 nuts & lock washers *(A)* from the of angle bar.
2. Place the angle bar to on slot of the saddle plate *(B)*, adjust to desired position then tighten the nut & lock washer *(A)*.
3. Repeat for the other angle bar.

<u>model BH7210 (see Fig 3):</u>

Tools required: 18 mm wrench.

1. Remove the M12x35 bolt, washers & nut *(C & D)* from the angle bar.
2. Place and align the angle bar to one slot of the saddle plate.
3. Insert flat washer & bolt *(C)* through the angle bar hole and saddle plate slot *(E)*. Adjust to desired position then tighten with nut and lock washer *(D)*.
4. Repeat for the other angle bar.

Fig. 2

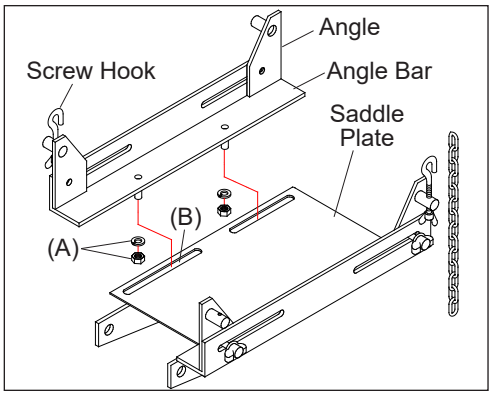

Fig. 3

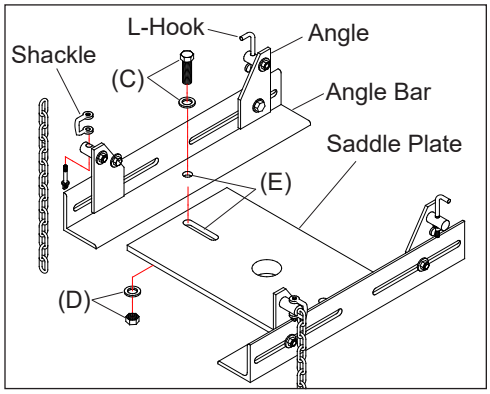

Before Use

1. Verify that the product and application are compatible, if in doubt call Blackhawk Automotive technical service (816) 891-6390.
2. Before using this product, read the operator's manual completely and familiarize yourself thoroughly with the product, its components and recognize the hazards associated with its use.
3. To familiarize yourself with basic operation, locate and turn the release valve knob *(see Fig 1)*:
   a. <u>Clockwise</u> until firm resistance is felt to further turning. This is the '**CLOSED**' release valve position used to **raise** the saddle plate.
   b. <u>Counter-clockwise</u>, but no more than 1/2 turn from the closed position. This is the '**OPEN**' release valve position used to **lower** the saddle plate.
4. With saddle fully lowered, remove the oil filler plug. Pump 6 to 8 full strokes. This will help release any pressurized air which may be trapped within the reservoir. Check oil level. Proper oil level will vary from just covering the ram cylinder to 3/16" above it as seen from the oil filler hole. Reinstall the oil filler plug.
5. Ensure that jack rolls freely. Raise and lower the unloaded jack throughout the lifting range before putting into service to ensure the pump operates smoothly. Replace worn or damaged parts and assemblies with Blackhawk authorized replacement parts only.

Bleeding / Venting Trapped Air

With the release valve in the OPEN position (3b.) and with saddle fully lowered, locate and remove the oil filler plug. Pump 6 to 8 full strokes. This will help release any pressurized air which may be trapped within the reservoir. Reinstall the oil filler plug.

⚠ WARNING

- **Read, understand, and follow** all printed material provided with and on this product **before use**.
- **Do not** exceed rated capacity.
- Use **only** on hard, level surfaces.
- **Adequately support the vehicle before starting repairs.**
- If loaded jack must be moved, make certain that load is secured by appropriate means, is stable, is in the **lowest possible position**, is moved over a smooth, hard level surface and that the l**ifting platform is level**.
- Use of this product is **limited to removal, installation, and transportatio**n of **automotive and light truck transmissions, transfer cases and transaxles**.
- Use only adapters / accessories provided by the manufacturer of this transmission jack.
- Use only adapters / accessories whose **rated capacity is greater** than the rated capacity of this jack.
- Ensure the center of gravity is **center loaded** on the saddle.
- Never use this device as a work/repair station. **Transfer** the **load immediately** to a suitable work station.
- No alteration shall be made to this product.
- **Failure to heed** these markings may **result** in **personal injury and/or property damage**.

⚠ WARNING

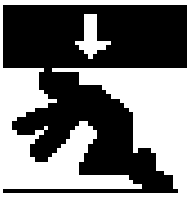

To avoid **crushing and related injuries**:

- **Never** work on, under or around a load supported only by hydraulic jack.
- **Be alert** and **sober** when using this product. Do not operate under the influence of drugs or alcohol.

SPECIFICATIONS

Model	Capacity	Min. Height	Max. Height	Saddle Base	Extended Saddle Area	Jack Size	Volume of Hyd. Oil
BH7011	1100 lb	8 1/2"	24 3/4"	12 5/8" x 7 7/8"	17" x 9 3/8"	31" x 15"	85 mL
BH7210	2000 lb	7 7/8"	33 1/2"	14 1/4" x 7 7/8"	17" x 15 1/2"	40 3/8" x 19 1/8"	155 mL

OPERATION

Follow the instruction for removal and installation of transmission, transfer case or transaxle according to the vehicle manufacturer's service man

Raise saddle assembly:

1. Close release valve by turning release valve knob clockwise firmly.
2. Insert handle into handle sleeve, then pump handle until the load is contacted.
3. Secure load with provided chains.

Ensure center gravity of load is centered on the saddle and load is stable before moving jack. An off-center transmission could cause the jack to tip or flip over .

Lower saddle:

Be sure all tools and personnel are clear before lowering load. ***Slowly open the release valve!*** *The more you turn the knob counter-clockwise, the faster the load will come down.* ***Maintain control*** *of the rate of speed at which the load lowers at all times!*

1. Secure load to the jack with provided chain.
2. Slowly, gently turn the release valve knob counter-clockwise, never more than 1/2 full turn until the load is completely lowered.
3. Immediately transfer the load to an appropriate work station.
4. After removing load from the jack, ensure that saddle is fully lowered to reduce ram exposure to rust and contamination.

Never *use this jack as a workstation!*

MAINTENANCE

Important: Use only good grade hydraulic jack oil. Avoid mixing different types of fluid and NEVER use brake fluid, turbine oil, transmission fluid, motor oil or glycerin. Improper fluid can cause premature failure of the jack and the potential for sudden and immediate loss of load. We recommend Hein-Werner HW93291 or equivalent hydraulic jack oil.

Adding oil

1. With saddle fully lowered set jack in its upright, level position. Locate and remove oil filler plug.
2. Fill with oil until ~3/16" above the inner cylinder as seen from the oil filler hole. Reinstall oil filler plug.

Changing oil

For best performance and longest life, replace the complete fluid supply at least once per year.

1. With saddle fully lowered, remove oil filler plug.
2. Lay the jack on its side and drain the fluid into a suitable container.

Note. Dispose of hydraulic fluid in accordance with local regulations.

3. Set jack in its level position. Fill with oil until ~3/16" above the inner cylinder as seen from the oil filler hole. Reinstall oil filler plug.

Lubrication

A periodic coating of light lubricating oil to pivot points, axles and hinges will help to prevent rust and assure that casters and pump assemblies move freely.

Cleaning

Periodically check the pump piston and ram for signs of rust or corrosion. Clean as needed and wipe with an oily cloth.

Note: Never use sandpaper or abrasive material on these surfaces!

Storage

When not in use, store the jack with saddle fully lowered.

TROUBLESHOOTING

Symptom	Possible Causes	Corrective Action
Jack will not lift load	• Release valve not tightly closed • Load is too heavy	• Ensure release valve tightly closed • Consider higher capacity jack
Jack will lift, but not maintain pressure	• Release valve not tightly closed • Hydraulic unit malfunction	• Ensure release valve tightly closed • Discontinue use, Contact Blackhawk Tech. Service
Jack will not lower after unloading	• Reservoir overfilled • Linkage binding	• Ensure load is removed, then drain fluid to proper level • Clean and lubricate moving parts
Poor lift performance	• Fluid level low • Air trapped in system	• Ensure proper fluid level • With ram fully retracted, remove oil filler plug to let pressurized air escape, reinstall oil filler plug
Jack will not lift to full extension	• Fluid level low	• Ensure proper fluid level

REPLACEMENT PARTS

(refer to page 8 thru 11)

Not all components of the jack are replacement items, but are illustrated as a convenient reference of location and position in the assembly sequence. When ordering parts, give Model number, serial number and parts description. Call or write for current pricing: SFA Companies, 10939 N. Pomona Ave. Kansas City, MO 64153, U.S.A.
Tel: (816) 891-6390 Fax: (816) 891-6599 E-Mail: sales@blackhawk-automotive.com

Replacement Parts Illustration for Model BH7011

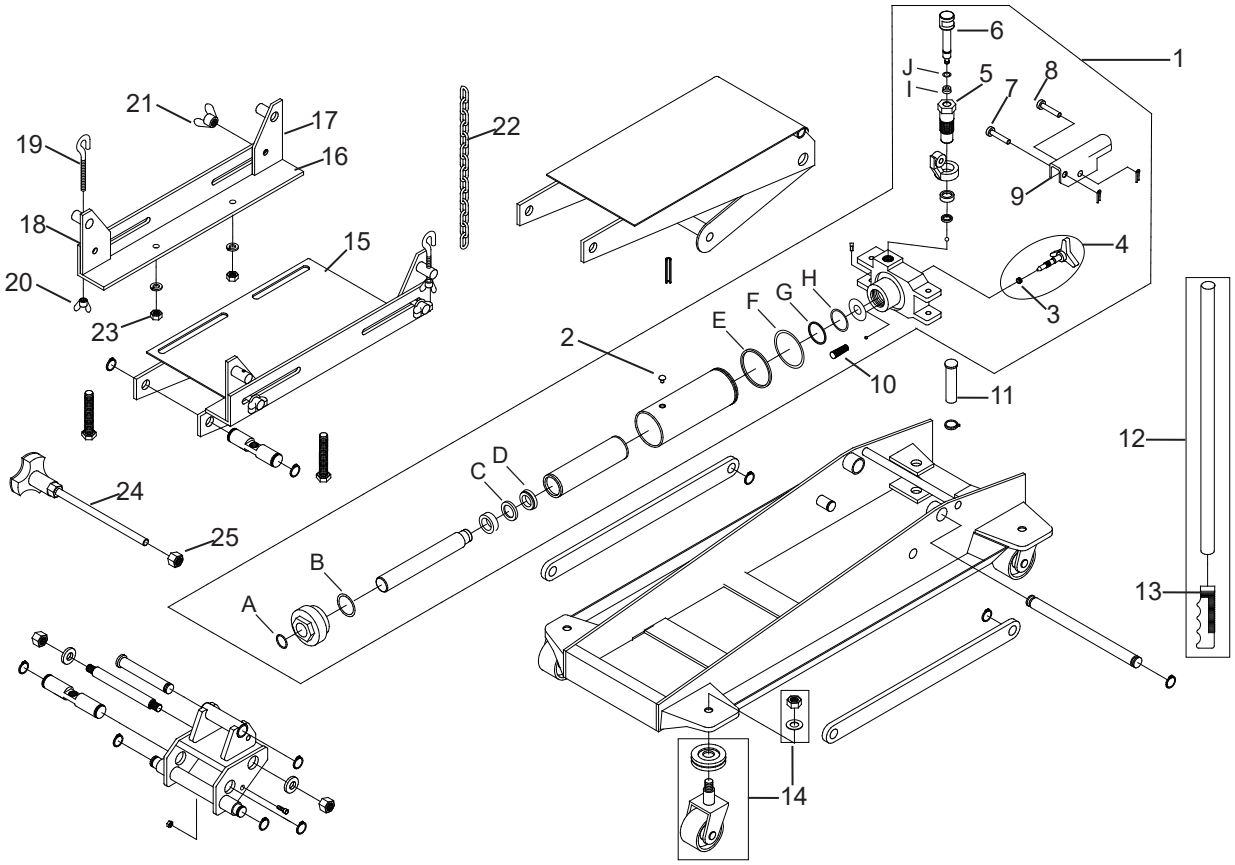

Figure 4 - Replacement Parts Illustration for Model BH7011

Replacement Parts List for Model BH7011

Item	Part No.	Description	Qty.
1	4500-01000-000	Hydraulic Unit	1
2	5905-00100-100	Filler Plug	1
3	5905-00091-000	Oil Seal	1
4	4500-90009-K03	Release Valve	1
5	4500-01004-000	Pump Cylinder	1
6	4500-01301-000	Pump Piston	1
7	5403-10038-000	Pin	1
8	5403-08038-000	Pin	1
9	4500-01008-000	Handle Sleeve	1
10	B020-10003-000	Filter	1
11	4500-00004-000	Pivot Pin, Hyd Unit	2
12	4500-02000-000	Handle Assembly	1
13	BL80-20002-000	Handle Grip	1
14	4500-90009-K02	Caster Assembly	4
15	4500-03000-000	Saddle Assembly	1
16	4500-03300-000	Angle Bar	2
17	4500-03100-000	Angle I	2
18	4500-03200-000	Angle II	2
19	4500-03001-000	Screw Hook	2
20	5207-00006-000	Wing Nut, M6	2
21	5207-00010-000	Wing Nut, M10	4
22	4500-03002-000	Chain	1
23	5202-00010-000	Nut	4
24	4500-03600-000	Tilt Screw	1
25	5202-00012-001	Nut, M12	1
*	45000S-071	Seal Kit, Hyd Unit	-

(*) Seal Kit Contents:		
Item	Description	Qty.
2	Filler Plug	1
3	Oil Seal	1
A	O-ring	1
B	O-ring	1
C	Back-up Ring	1
D	U-cup	1
E	Back-up Ring	1
F	O-ring	1
G	Back-up Ring	1
H	O-ring	1
I	Seal	1
J	O-ring	1

Replacement Parts Illustration for Model BH7210

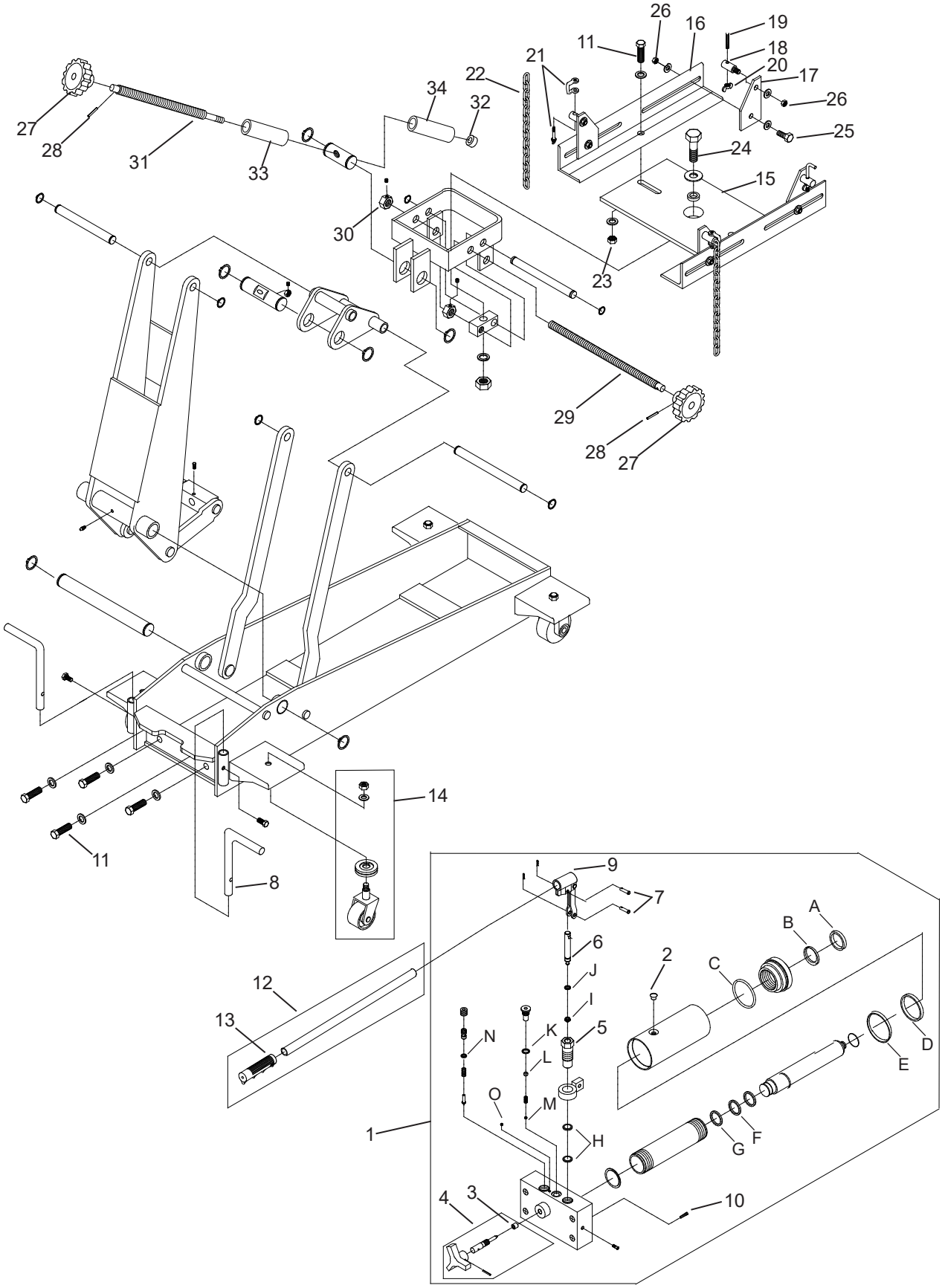

Figure 5 - Replacement Parts Illustration for Model BH7210

Replacement Parts List for Model BH7210

Item	Part No.	Description	Qty.
1	4200-01000-000	Hydraulic Unit	1
2	5905-00100-100	Filler Plug	1
3	5905-00056-000	Oil Seal	1
4	4200-90009-K02	Release Valve	1
5	4200-01002-000	Pump Cylinder	1
6	4200-01401-000	Pump Piston	1
7	5405-07027-000	Pin	2
8	4200-00001-000	Handle Bar	2
9	4200-01300-000	Handle Sleeve	1
10	B020-10003-000	Filter	1
11	5102-12035-000	Hex. Bolt, M12	6
12	4500-02000-000	Handle Assembly	1
13	BL80-20002-000	Handle Grip	1
14	4200-90009-K01	Caster Assembly	4
15	4200-03100-000	Saddle Plate	1
16	4200-03007-000	Angle Bar	2
17	4200-03010-000	Angle	4
18	4200-03003-000	Hook Screw	4
19	4200-03011-000	L-Hook	2
20	5207-00008-000	Wing Nut, M8	2
21	4200-03600-000	Shackle	2
22	4200-03004-000	Chain	2
23	5202-00012-001	Nut, M12	2
24	5103-16065-000	Hex. Bolt, M16	1
25	5102-10025-000	Hex. Bolt, M10	4
26	5202-00010-000	Nut	8
27	4200-03401-000	Knob	2
28	5402-04025-000	Spring Pin	2
29	4200-03402-000	Tilt Screw	1
30	4200-03013-000	Nut	2
31	4200-03501-000	Tilt scerw	1
32	K040-03000-100	Bearing	1
33	4200-03015-000	Tube I	1
34	4200-03016-000	Tube II	
*	42000S-102	Seal Kit, Hyd Unit	-

(*) Seal Kit Contents:		
Item	Description	Qty.
2	Filler Plug	1
3	Oil Seal	1
A	Seal	1
B	U-cup	1
C	O-ring	1
D	Back-up Ring	1
E	Seal	1
F	Back-up Ring	1
G	U-cup	1
H	O-ring	2
I	Seal	1
J	O-ring	1
K	O-ring	1
L	Steel Ball	1
M	Steel Ball	1
N	O-ring	1
O	Steel Ball	1

ONE YEAR LIMITED WARRANTY

For a period of one (1) year from date of purchase, SFA Companies will repair or replace, at its option, without charge, any of its products which fails due to a defect in material or workmanship under normal usage. This limited warranty is a consumer's exclusive remedy.

Performance of any obligation under this warranty may be obtained by returning the warranted product, freight prepaid, to SFA Companies Warranty Service Department, 10939 N. Pomona Ave., Kansas City, MO 64153.

Except where such limitations and exclusions are specifically prohibited by applicable law,
(1) THE CONSUMER'S SOLE AND EXCLUSIVE REMEDY SHALL BE THE REPAIR OR REPLACEMENT OF DEFECTIVE PRODUCTS AS DESCRIBED ABOVE.
(2) SFA Companies SHALL NOT BE LIABLE FOR ANY CONSEQUENTIAL OR INCIDENTAL DAMAGE OR LOSS WHATSOEVER.
(3) ANY IMPLIED WARRANTIES, INCLUDING WITHOUT LIMITATION THE IMPLIED WARRANTIES OF MERCHANTABILITY AND FITNESS FOR A PARTICULAR PURPOSE, SHALL BE LIMITED TO ONE YEAR, OTHERWISE THE REPAIR, REPLACEMENT OR REFUND AS PROVIDED UNDER THIS EXPRESS LIMITED WARRANTY IS THE EXCLUSIVE REMEDY OF THE CONSUMER, AND IS PROVIDED IN LIEU OF ALL OTHER WARRANTIES, EXPRESS OR IMPLIED.
(4) ANY MODIFICATION, ALTERATION, ABUSE, UNAUTHORIZED SERVICE OR ORNAMENTAL DESIGN VOIDS THIS WARRANTY AND IS NOT COVERED BY THIS WARRANTY.

Some states do not allow limitations on how long an implied warranty lasts, so the above limitation may not apply to you. Some states do not allow the exclusion or limitation of incidental or consequential damages, so the above limitation or exclusion may not apply to you. This warranty gives you specific legal rights, and you may also have other rights, which vary from state to state.

SFA Companies
10939 N. Pomona Ave. Kansas City, MO 64153
816-891-6390
sales@blackhawk-automotive.com